SECTION A

Answer ALL questions.

In Section A put a cross in one box ☒ to indicate your answer. If you change your mind, put a line through the box ☒ and then put a cross in another box ☒.
Each question in Section A is worth one mark.

1 Arif and Carl share £60 in the ratio 3:2

How much money does Arif receive?

£12 ☐ £20 ☐ £24 ☐ £36 ☐

---

2 Dave rolls a fair 6-sided dice whose sides are numbered 1, 2, 3, 4, 5 and 6

What is the probability that he rolls a number that is 5 or more?

$\frac{1}{5}$ ☐ $\frac{1}{6}$ ☐ $\frac{2}{6}$ ☐ $\frac{5}{6}$ ☐

---

3 What is the size of angle a in the diagram?

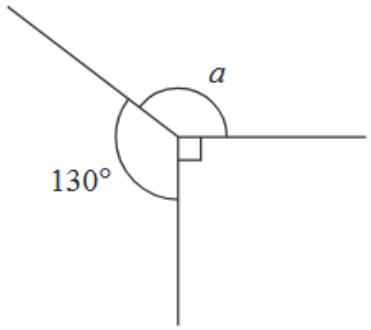

Diagram **NOT** accurately drawn

115° ☐ 130° ☐ 140° ☐ 230° ☐

---

4 Find the value of $3a + 4b$ when $a = 5$ and $b = 2$

14 ☐ 23 ☐ 38 ☐ 77 ☐

---

5 Which of these values is the greatest?

0.4 ☐ $\frac{1}{3}$ ☐ $\frac{3}{10}$ ☐ 37% ☐

---

6 The two-way table shows the grades that students were awarded in an exam.

	Grade A	Grade B	Grade C	Total
Boys	14	23	17	54
Girls	16	21	14	51
Total	30	44	31	105

How many girls were **not** awarded a Grade A?

14 ☐ 35 ☐ 37 ☐ 88 ☐

---

7 Factorise fully $4m + 12$

$2(2m + 6)$ ☐ $2(2m + 12)$ ☐ $4(m + 3)$ ☐ $4(m + 12)$ ☐

---

8 The coordinates of the point A are (3, –5).

The coordinates of the point B are (–5, 11).

What are the coordinates of the midpoint of AB?

(–4, –8) ☐ (–1, 3) ☐ (–2, 6) ☐ (4, 8) ☐

---

9 Which of these diagrams shows a pair of alternate angles?

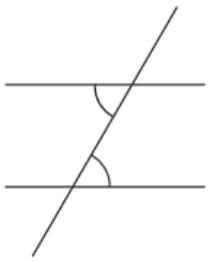

☐

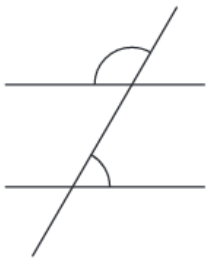

☐

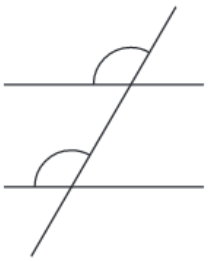

☐

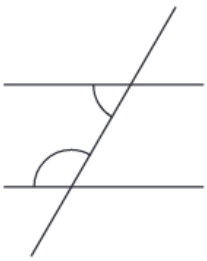

☐

---

10 A circle has a diameter of 9 cm.

What is the area of the circle to the nearest cm^2?

14 cm^2 ☐ 28 cm^2 ☐ 64 cm^2 ☐ 254 cm^2 ☐

11 Expand and simplify $10 - 4(2f - 1)$

$6 - 8f$	$9 - 8f$	$12f - 6$	$14 - 8f$
☐	☐	☐	☐

---

12 Round 4.60876 to 3 decimal places.

4.60	4.61	4.608	4.609
☐	☐	☐	☐

---

13 What type of correlation is shown on the scatter graph?

Negative	Straight	Positive	Indirect
☐	☐	☐	☐

---

14 What is the size of angle c in the diagram?

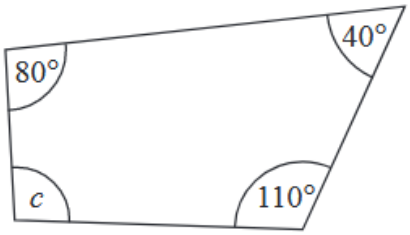

Diagram **NOT** accurately drawn

70° ☐ 100° ☐ 130° ☐ 140° ☐

---

15 Find the value of

$$\frac{4+3\times 6}{2}+8$$

15 ☐ 19 ☐ 25 ☐ 29 ☐

---

16 The cost of a television is reduced by 20% in a sale.

It now costs \$1200

What was the original cost of the television?

\$960 ☐ \$1000 ☐ \$1440 ☐ \$1500 ☐

---

17 When a football team play a match they can either win, lose or draw.

The probability that they win a match is $\frac{11}{20}$

The probability that they draw a match is $\frac{3}{10}$

What is the probability that they lose a match?

$\frac{1}{3}$ ☐ $\frac{3}{20}$ ☐ $\frac{17}{20}$ ☐ $\frac{17}{30}$ ☐

18. The population of a country increases by 5%.

What is the original population multiplied by to obtain the new population?

0.05	0.95	1.05	1.5
☐	☐	☐	☐

---

19. A cylinder has a radius of 6 cm and a length of 10 cm.

What is the volume of the cylinder in terms of π?

60π cm^3	120π cm^3	360π cm^3	1440π cm^3
☐	☐	☐	☐

---

20. Which of these is the equation of a line that is parallel to $y = 4x + 12$?

$y = 4x - 12$	$y = 12x + 4$	$y = 2x + 6$	$x = 4y + 12$
☐	☐	☐	☐